REV.	SPECIFICATION	ECN NO.	APPD.

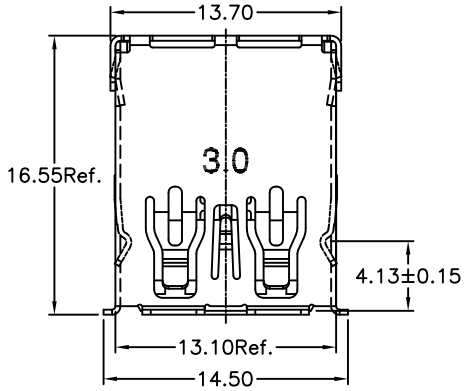

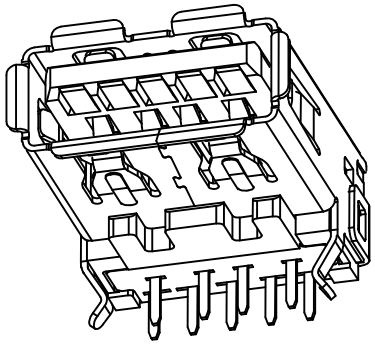

Material:
Housing: Thermoplastic Polyester Glass Filled UL94V-0.
Baffle: Thermoplastic Polyester Glass Filled UL94V-0.
Contacts: Copper Alloy.
Shell: Copper Alloy.

Electrical Characteristics:
Current Rating: 1.8 A(Only Pin1 and Pin4).
0.25 A(For Other Pin).
Dielectric Withstanding Voltage : AC 100V For 1 minute.
Insulator Resistance: 100MΩ min. at DC 250V.
Contact Resistance: 30mΩ max.
Operating Temperature: -55°C~ +85°C.

Mechanical Characteristics:
Insertion Force : 3.5 Kgf max.
Withdrawal Force : 1.0 Kgf min.
Durability : 1500 Cycles.

***RoHS Compliant**

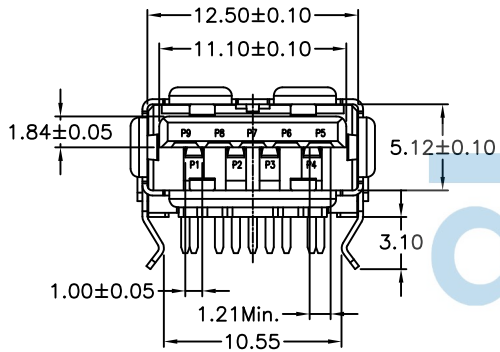

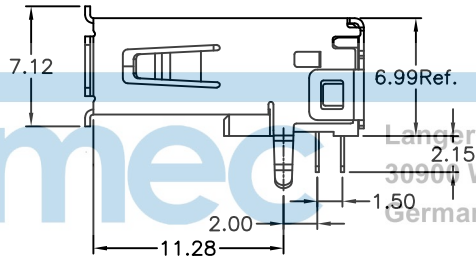

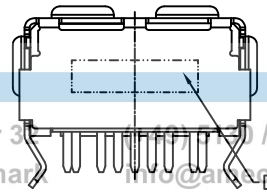

amec
Langer Acker 30 (+49) 5130 / 58642-0
30900 Wedemark info@amec-gmbh.de
Germany www.amec-gmbh.de

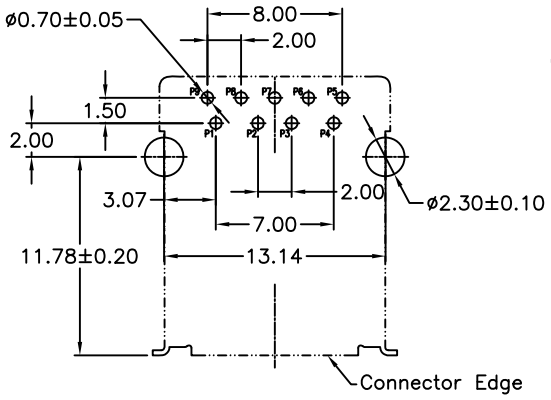

P.C. Board Layout

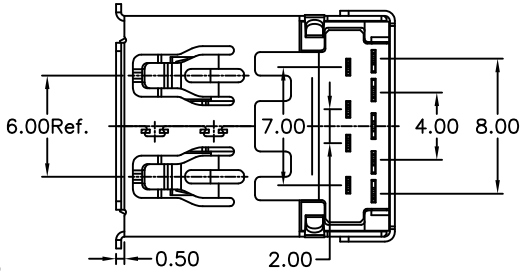

Pin Number	Signal Name
1	VBUS
2	D-
3	D+
4	GND
5	StdA_SSRX-
6	StdA_SSRX+
7	GND-DRAIN
8	StdA_SSTX-
9	StdA_SSTX+

8972-A	09	C	30	R	U	A
Series	Position	C: Selective Gold Plated	30: 30 u"	R: Right Angle	U: Blue	A: Tray Package

Tolerances	Drawn No.	8972D02003	Title:	OUPIIN ELECTRONIC(KUNSHAN) CO., LTD.
x = ±0.50	Projection		8972 Series	P/N: 8972-A09C30RUA
.x = ±0.38	Unit mm	Scale 1:1	USB 3.0A Type	SHEET 1/1 Ver.No. B1
.xx = ±0.25	Drawn By	Vic Lyu11/16'15	① 705	